SEPTIC SYSTEM INSPECTION REPORT

A private inspection. This is not an evaluation of an existing system by the county health department under Ala. Admin. Code r. 420-3-1-.33.

Street address	City	County	ZIP	Inspection date
1272 StillWaters Drive	Dadeville	Tallapoosa	36853	10/15/2026

Client(s)	Owner of record	Reason for inspection
Kevin and Dana Yarbrough	Gary Holloway	Buyers' pre-purchase inspection

Inspection company	Phone	Company AOWB license no.
Tallapoosa Septic & Excavation, LLC	(256) 555-0183	2147

Inspector	Inspector's AOWB license type	License no.
Travis McCurdy	Basic Level Installer	2147

1 Records from the county health department

Records the buyer or owner asked the county health department (LHD) for. Copies are attached when found.

ADPH record	Found	Not found	N/A	Date, number, or notes
CEP-2, Application for a Permit to Install (Repair)	X			Permit to Install issued 03/2009
CEP-2/3 Part C, Site Evaluation Data	X			Soil classifier's evaluation, 02/2009
CEP-5, Installer's Onsite Sewage Disposal System Certification	X			Installer certification filed 05/2009
CEP-6, Engineer's Onsite Sewage Disposal System Certification			X	Not an engineered system
CEP-5A, Waiver of a Permit to Repair (the LHD does not inspect the repair)		X		No repair waiver on file
Approval for Use issued by the LHD	X			Approval for Use dated 05/2009

Year installed	Bedrooms permitted	Bedrooms in the home	Water supply	System type
2009	3	3	Public water	Conventional, gravity

2 Last pump-out

The LHD asks for a pump-out within the last 3 years by an AOWB licensed pumper (r. 420-3-1-.33(3)).

Date pumped	Pumped by	AOWB pumper license no.	Gallons removed	Receipt attached
08/18/2026	Lake Martin Pumping Service	1094	1,000	Yes

Liquid level today	Sludge depth today	Scum depth today	Within the last 3 years	Pumped at this inspection
At the outlet	2 in.	1 in.	Yes	No

3 System found

Tank material	Tank size (gallons)	Compartments	Depth to lid	Risers to grade
Precast concrete	1,000	2	14 in.	None

Effluent filter	Distribution	Disposal field type	Lines and total length	Pump tank and alarm
Yes, at the outlet	Distribution box	Gravel trenches	3 lines, 210 ft	None, gravity

4 Tank and components

NI means not inspected. Say why in the notes.

Component	OK	Defect	NI	Notes
Lids and risers	X			Concrete lids sound; dug up from 14 in.
Tank walls and top	X			No cracks seen above the liquid
Inlet baffle or tee	X			Concrete baffle intact
Outlet baffle or tee	X			PVC tee intact
Effluent filter	X			Partly clogged; cleaned and reset
Liquid level at the outlet	X			At the outlet, normal level
Sewer line from the house	X			4 in. PVC; flowed freely during a 20 minute water run
Distribution box		X		Out of level about 1 in., low toward trench 3
Pump, floats, and alarm				None, gravity system

5 Disposal field and site

Was any of this found?

Condition	Yes	No	N/A
Sewage or effluent on the ground		X	
Wet or soggy soil, or lush grass in strips over the lines	X		
Sewage odor at the tank or the field		X	
Slow drains or backups in the house		X	
Roots or groundwater coming into the tank		X	
A driveway, building, or other structure on any part of the system		X	
Roof drains, a sump pump, or a footing drain tied into the system		X	

6 Location

Tank to house	Tank to nearest well	Field to nearest well	Field to lake, stream, or spring
12 ft	No well	No well	110 ft to the shoreline

7 Findings and recommendations

No.	Component	What was found	Recommendation
1	Disposal field, end of trench 3	Soft, wet soil over about 4 ft at the far end of trench 3, with greener grass. No effluent on the surface and no odor.	Recheck after a dry week. Keep vehicles off the field. If it stays wet, have an AOWB licensed installer probe the trench.
2	Distribution box	About 1 in. out of level, so the outlet to trench 3 takes more of the flow.	Have an AOWB licensed installer level the box. Ask the LHD whether the work needs a permit.
3	Effluent filter	Partly clogged with solids. Cleaned and reset today.	Clean it every 6 to 12 months and at each pump-out.
4	Lids	Both lids are 14 in. below grade, with no risers.	Add risers to grade so the next pump-out needs no digging.
5			

8 Sketch

The house, tank, distribution box, disposal field lines, and distances, as found.

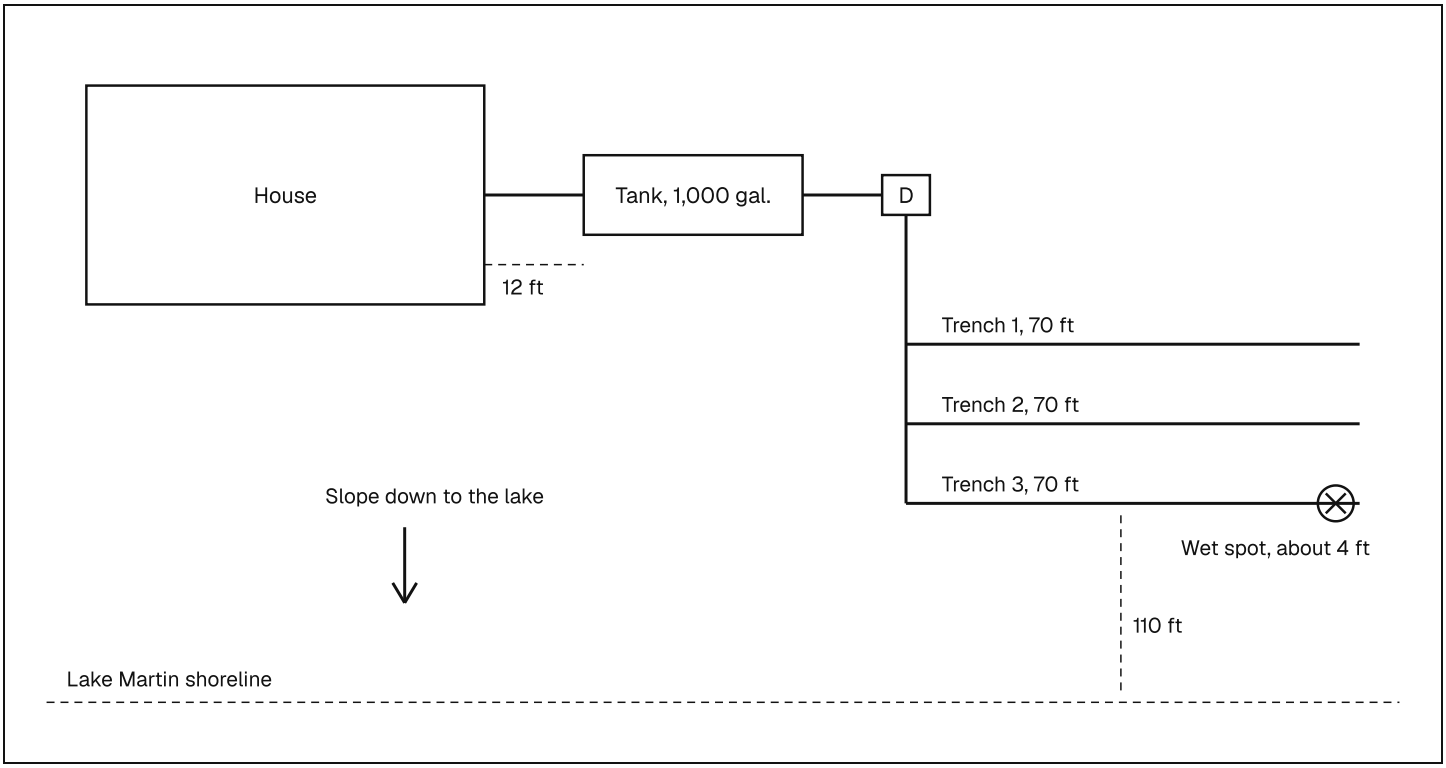

9 Statement

Ala. Admin. Code r. 420-3-1-.33(4): **"Similar inspection services, such as those provided by a home inspector or an AOWB licensee, shall not imply that the service was provided under authority of these rules, nor shall they imply that the system complies with these rules."**

This inspection was not provided under authority of Ala. Admin. Code chapter 420-3-1. It is not an evaluation of an existing system by the county health department, and it does not mean the system complies with chapter 420-3-1.

This report describes the system only as the inspector found it on the inspection date. It does not promise that the system will keep working for any length of time.

A lender or the purchase contract may call for the county health department's own evaluation instead. The county may decline to evaluate a system installed without a Permit to Install on or after March 18, 1982 (r. 420-3-1-.33(2)).

Travis McCurdy

Inspector signature

10/15/2026

Date